73" Heated Soaking Pedestal Tub – SanSiro SSPD73NWH Reinforced Acrylic

73" Heated Soaking Pedestal Tub – SanSiro SSPD73NWH Reinforced Acrylic



SPECIFICATIONS

Length	73 in.
Material	Reinforced Acrylic
Features	Water Heater; Faucet Included
Controls	Waterproof Remote Control
Jetting components	Fully Concealed in Tub Body

ELECTRICAL REQUIREMENTS

One 110V/15A GFCI Circuit

LIMITED WARRANTY

- 10 Year Tub Body Limited Warranty
- 5 Year Electrical Components Limited Warranty
- 12 Months Labor Limited Warranty

TECHNICAL DRAWING

See page 2 for the supplied dimensional drawing.

Quoted dimensions are approximate. Please confirm all critical dimensions before ordering or installation.

https://bathsofdistinction.com/products/sspd73nwh-water-heated

73" Heated Soaking Pedestal Tub – SanSiro SSPD73NWH Reinforced Acrylic

Dimensions shown in inches unless otherwise indicated. Drawing not to scale.

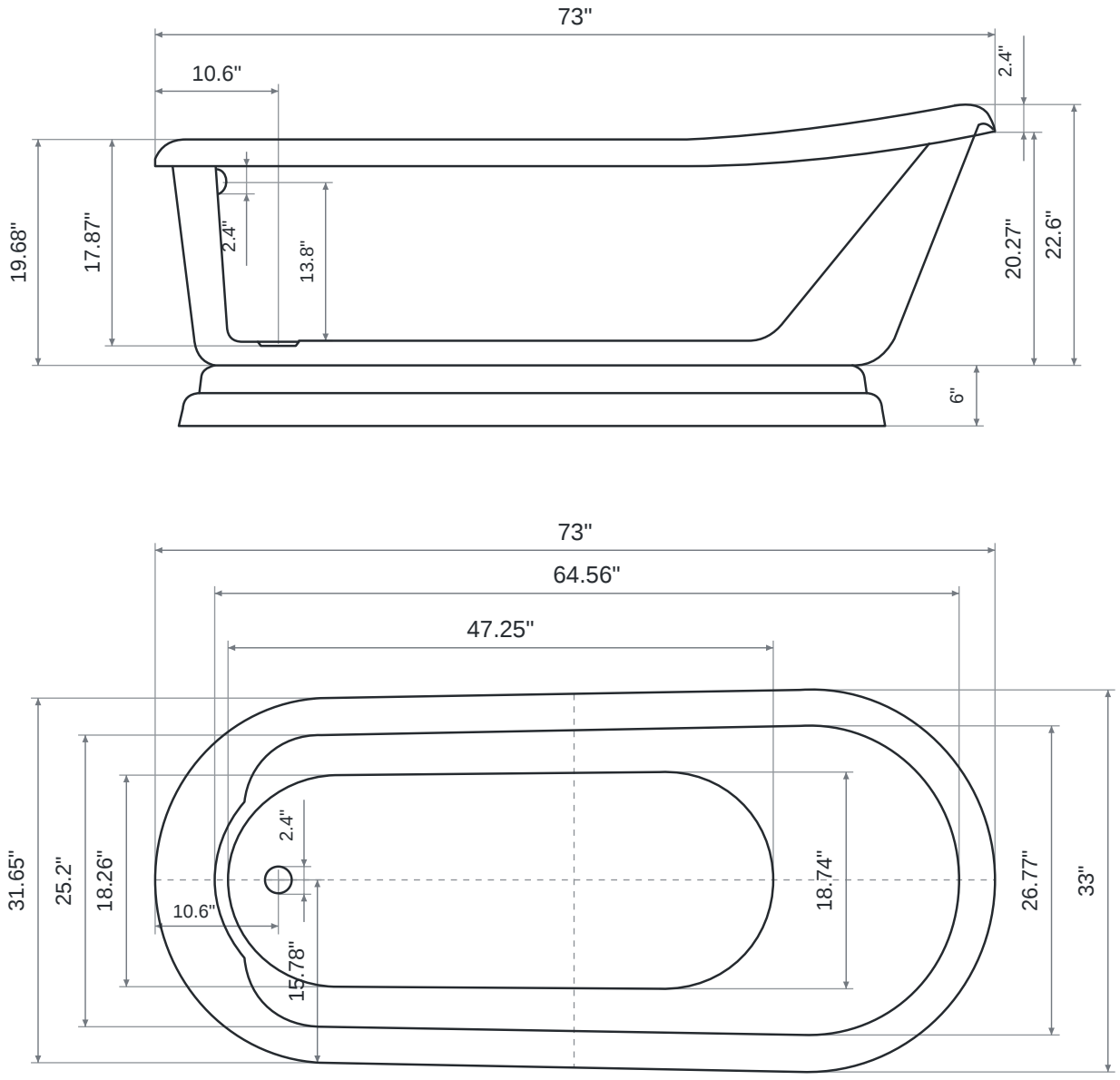

Quoted dimensions are approximate. Please confirm all critical dimensions before ordering or installation.