SanSiro Classique 79CAJ

79" x 40" Air Jetted Tub “SanSiro Classique 79CAJ” Reinforced Acrylic



SPECIFICATIONS

Length	79 in.
Width at widest point	40 in.
Height at highest point	24 in.
Bathing depth	16 in.
Stepover height	24 in.
Capacity to overflow	86 US gal.
Material	Reinforced Acrylic
Features	Air Jetting
Drain location	Center Front Reversible
Configuration	Double Ended
Controls	Waterproof Remote Control
Jetting components	Fully Concealed in Tub Body

ELECTRICAL REQUIREMENTS

One 110V/15A GFCI Circuit

LIMITED WARRANTY

- 10 Year Tub Body Limited Warranty
- 5 Year Jetting Parts Limited Warranty
- 12 Months Labor Limited Warranty

TECHNICAL DRAWING

See page 2 for the supplied dimensional drawing.

Quoted dimensions are approximate. Please confirm all critical dimensions before ordering or installation.

https://bathsofdistinction.com/products/sansiro-classique-79caj

SanSiro Classique 79CAJ

Dimensions shown in inches unless otherwise indicated. Drawing not to scale.

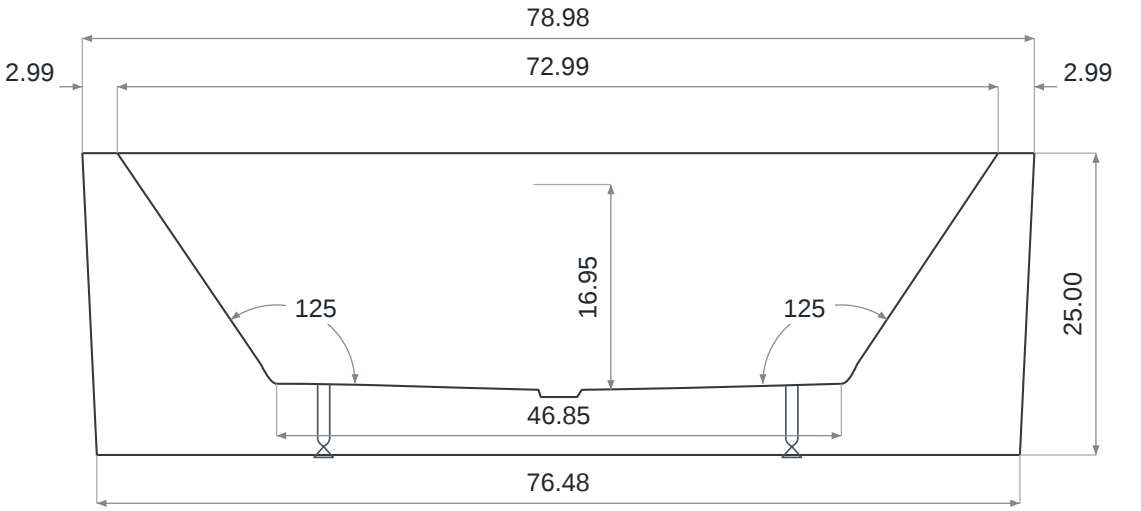

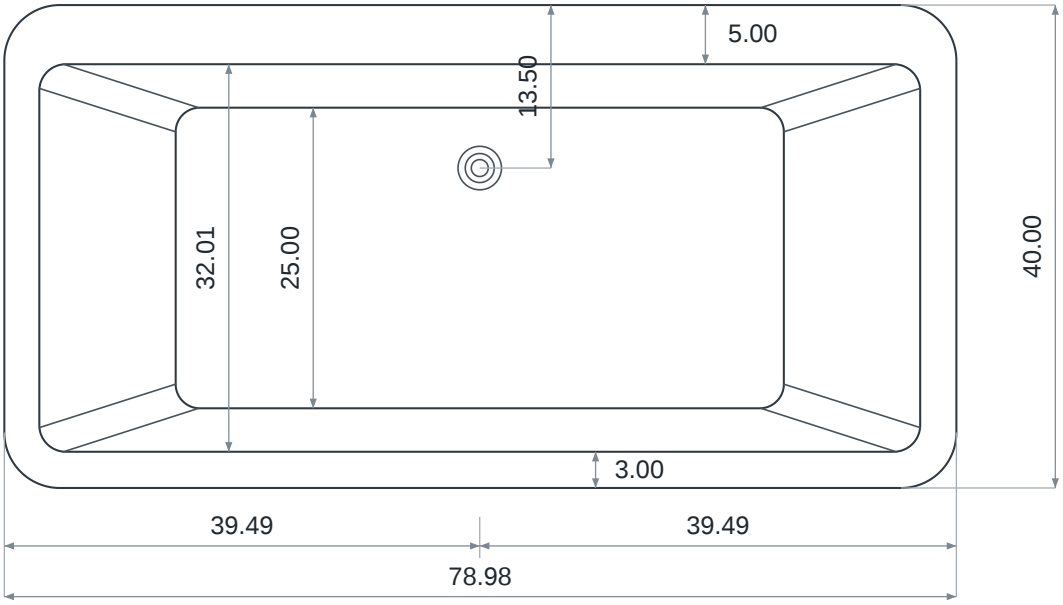

Quoted dimensions are approximate. Please confirm all critical dimensions before ordering or installation.