SanSiro HLFLPD53

53" Pedestal Tub “SanSiro HLFLPD53” CoreAcryl Acrylic



SPECIFICATIONS

Length	53 in.
Width at widest point	30 in.
Height at highest point	25 in.
Bathing depth	15 in.
Stepover height	25 in.
Capacity to overflow	41 US gal.
Approximate empty weight	122 lb
Material	CoreAcryl Acrylic
Features	Non-Jetted

LIMITED WARRANTY

- 10 Year Tub Body Limited Warranty

TECHNICAL DRAWING

See page 2 for the supplied dimensional drawing.

Quoted dimensions are approximate. Please confirm all critical dimensions before ordering or installation.

https://bathsofdistinction.com/products/hlflpd53

SanSiro HLFLPD53

Dimensions shown in inches unless otherwise indicated. Drawing not to scale.

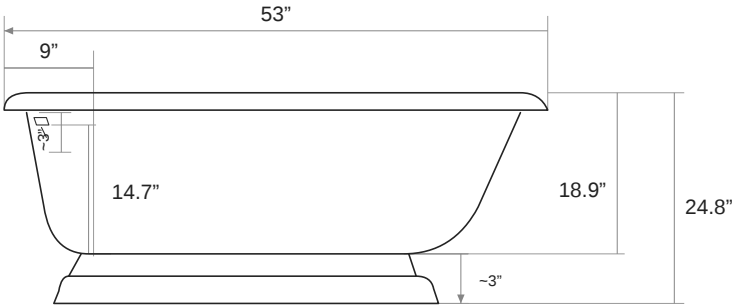

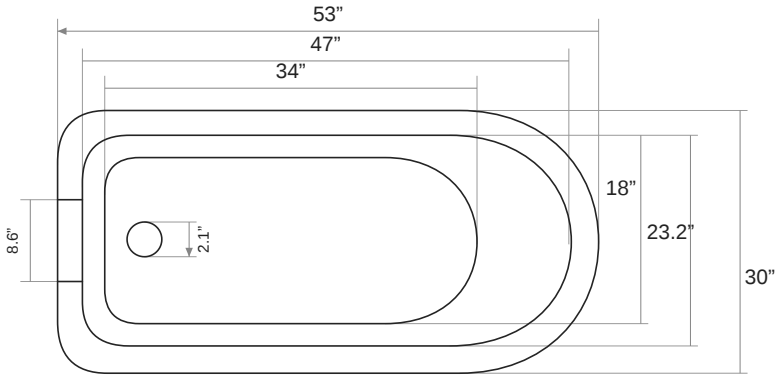

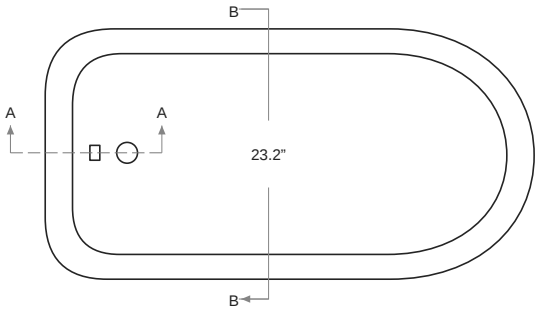

Topview

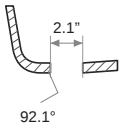

waste outlet opening

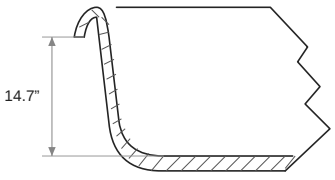

side view section A-A

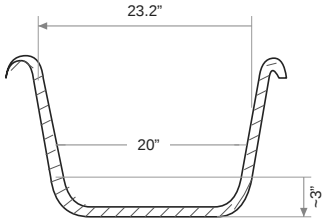

side view section B-B

Quoted dimensions are approximate. Please confirm all critical dimensions before ordering or installation.